THIS DOCUMENT IS CONFIDENTIAL AND CONTAINS PROPRIETARY INFORMATION AND INTELLECTUAL PROPERTY INCLUDING, BUT NOT LIMITED TO, TRADEMARKS, COPYRIGHTS, TRADE SECRETS, AND KNOW-HOW OF ANCHOR GLASS. THIS INFORMATION MAY NOT BE USED, DISCLOSED OR REPRODUCED, IN WHOLE OR IN PART, WITHOUT THE PRIOR WRITTEN CONSENT OF ANCHOR GLASS. TITLE IN AND TO THIS DOCUMENT AND ALL INFORMATION CONTAINED HEREIN REMAINS AT ALL TIMES IN ANCHOR GLASS.

63MM-2030 H
C-94259

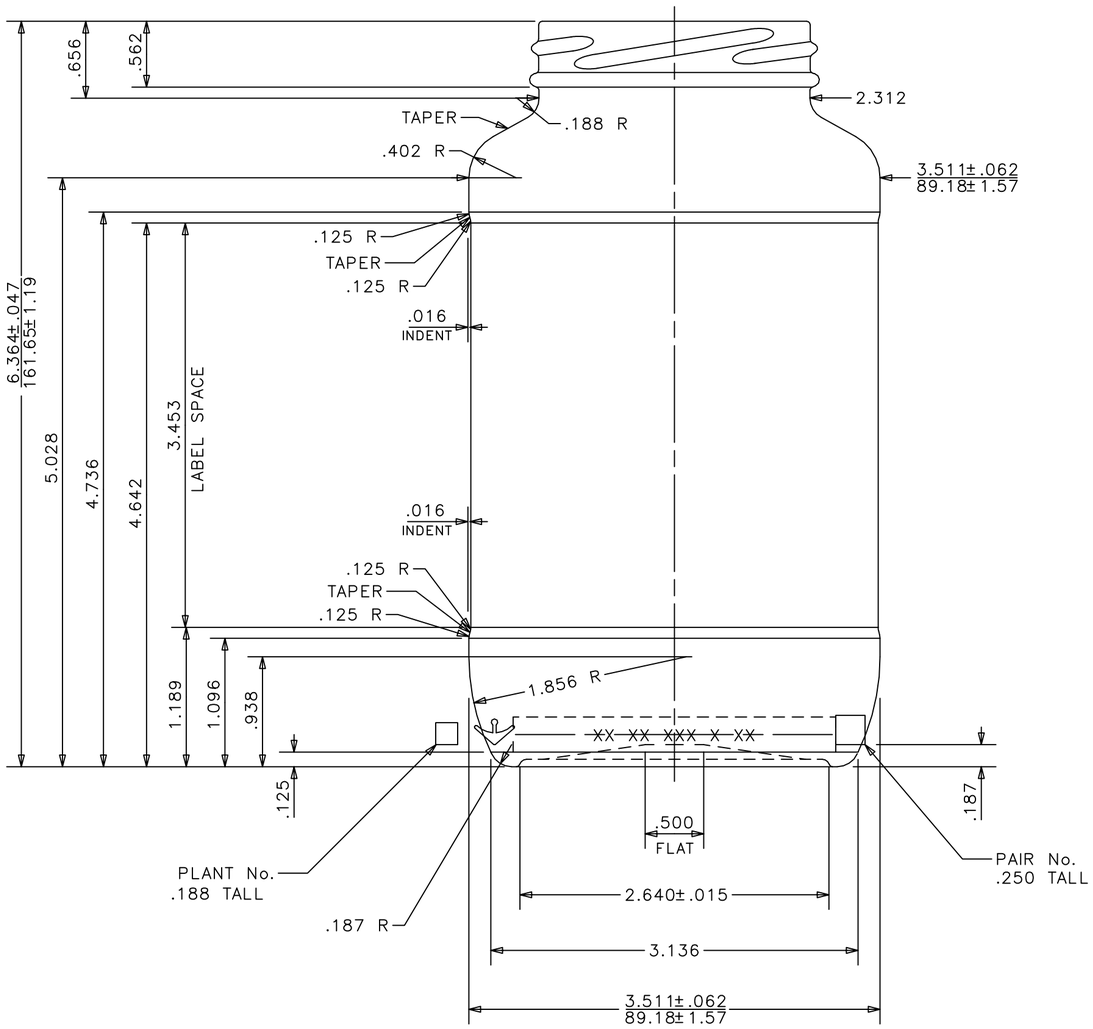

63-405 A
C-97491

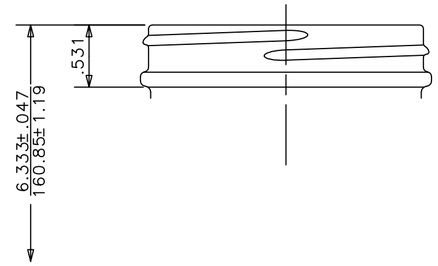

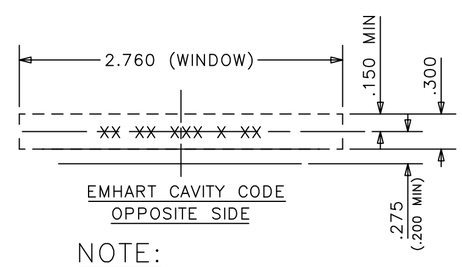

NOTE:
IF EMHART CAVITY IDENTIFICATION DOT CODE IS USED, THEY WILL APPEAR TWICE, CENTERED ONCE IN EACH HALF AS SHOWN.

NOTE:
REGION BETWEEN 1.000 DIA. & .400 DIA. IS FOR BINARY CAVITY CODE No. ONLY, AND MUST BE FREE OF ALL OTHER LETTERING.

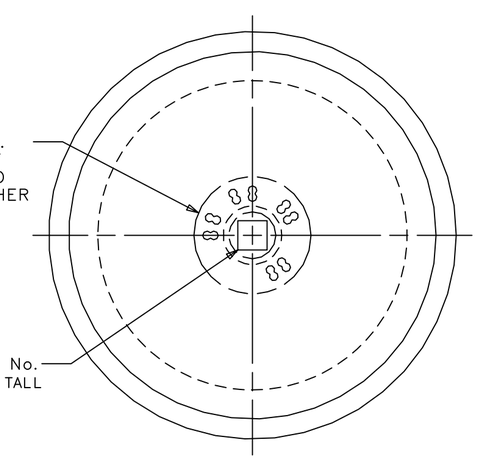

HEEL LETTERING: ROUND NOSED, RAISED .015 IN GLASS.
KNURLING: BPK No.180 ON BEARING SURFACE.
STACKING DETAIL: SEE DWG. No. C-32315 (63-2030)
BOTTOM LETTERING: ROUND NOSED.
TRADEMARK: No.0.

BLOW MOULD TO 22540

NOTE!
OVERALL HEIGHT -------- 6.364"(161.65mm)
LARGEST DIAMETER ------- 3.511"(89.18mm)

NOTE: THEORETICAL TIP ANGLE > 26° 43'.
THEORETICAL C.O.G. = 2.762 UP FROM BTM OF BTL.

REVISIONS		
7. DRAWING NUMBER WAS C-91274 - ADDED 63-405 FINISH	3/23/17	DT
6. ADDED "H" SUFFIX TO FINISH	7/24/07	SODE
5. REVISED TO GENERAL SALE - UPDATED TO ANCHOR GLASS STANDARDS.	12/16/05	DT
4. ADDED "BLOW MOULD" NOTE	07/02/03	JLEE
3. O'FLOW WAS 25-ADDED CHART-BODY DIA WAS 3.480	12/10/96	MDC
2. REMOVED "TENTATIVE DESIGN" NOTE.	10-29-96	DB
1. REV. SHOULDER AREA & ADDED ITEM No.22539	8-16-96	S.

SIZES & SPECIFICATIONS SHOWN ARE IDEAL -ACTUAL SAMPLES WILL DETERMINE SIZES.

SCALE: FULL
SHAPE CODE: 10

OVERFLOW: 25.450 ±.312 FL.OZS. 752.62 ±9.23 MLS.

FILL POINT OR NOMINAL CAPACITY:

WEIGHT: 12.000 OZS 340.20 GRAMS

PROJECT No. 17783 PB

ANCHOR GLASS CONTAINER
DESIGN/ENGINEERING TAMPA, FLORIDA

GENERAL SALE
ROUND SAUCE JAR

ITEM No. 22539

DATE 7-25-96 DRN. BY D. Strohm

DWG. No.: B-91274